GE VERNOVA

FACT SHEET

THRUST BALANCE VALVE REMOVAL & UPGRADE

Product Description

- The new thrust balance tube kit design eliminates the valve and 11th stage off-engine tube.
- The thrust balance valve (TBV) is replaced with an on-engine tube and an in-line plate orifice, which are installed with control system software modifications.
- The newly designed thrust balance valve system uses orifice bleed as a passive control system for balance of piston cavity pressure regulation.
- The tubing is mounted directly on the turbine using three transducers on the turbine rear frame struts.
- For LM6000PC packages, S4 fuel core is required for TBV removal; however, S5 fuel core offers additional trip reductions related to TBV removal software that will further benefit the customer.
- For LM6000PD packages, S5 fuel core is required for TBV removal.
- For Mark* VI controls, S5 core upgrade is not available on LM6000 PD units.
- For LM6000PC packages not able to upgrade to S5, modifications to S4 fuel core will be applied.

Customer Value

- Replacing the thrust balance valve with the new thrust balance orifice system will eliminate the maintenance of valve and oil leaks from the existing thrust balance valve system.
- Reduces trips related to TBV removal software.
- New software will be installed for monitoring thrust balance cavity pressure and to give an alarm when pressure changes.
- More developed frequency control algorithms to meet requirements from many different grid authorities.

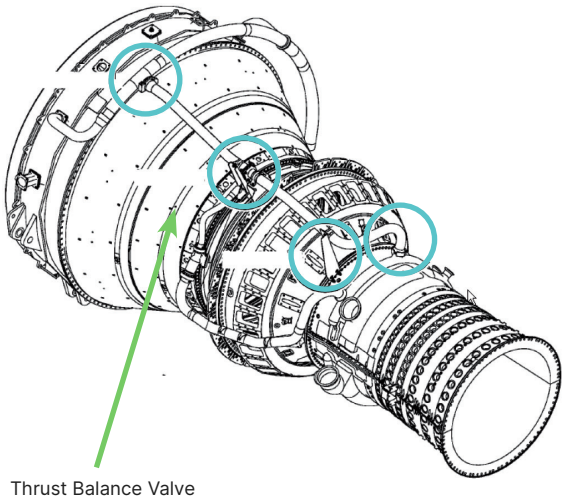

Thrust Balance Valve

Applicable Units			
LM6000**	✓	LM2500	
LMS100		LM5000	
LM1600		TM2500	

**Configured for LM6000 PC and LM6000 PD units only

GE Vernova's global service network provides life cycle support for more than 3,500 aeroderivative gas turbines worldwide to help you meet your business challenges and success metrics – anywhere and anytime. Our global service network connects with you locally for rapid response to your service needs.

To learn more about this product and its applicability to your gas turbine, please contact your GE Vernova Gas Power sales representative.

© 2024 GE Vernova and/or its affiliates. All rights reserved.

GEA32091C (04/2024)